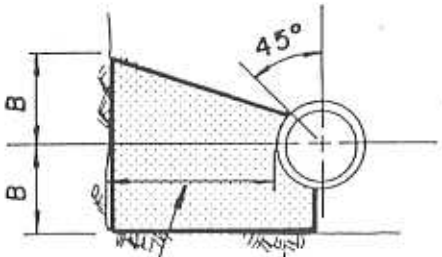

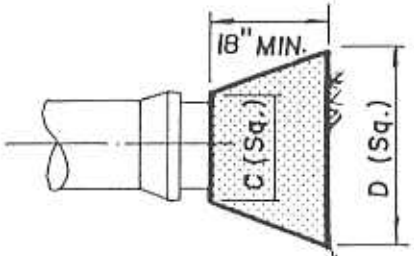

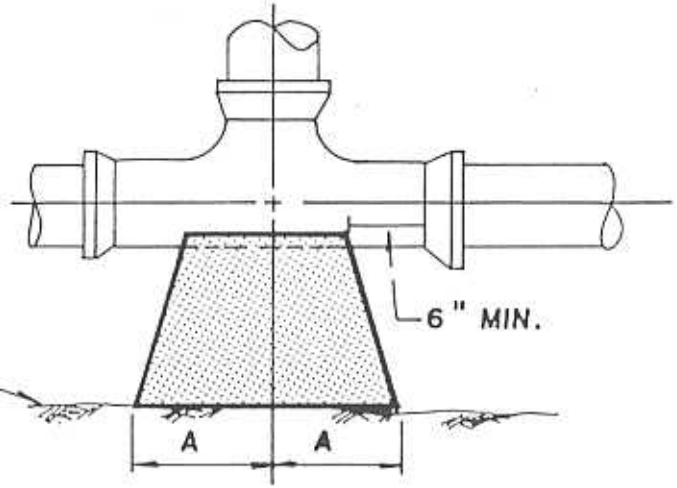

UNDISTURBED NATURAL GROUND

24" MIN. - 12" & LARGER PIPE
18" MIN. - 10" & SMALLER PIPE

BEND & TEE

PLUG

TEE

SIZE	90° BEND		45° BEND		22½° BEND		TEES		PLUGS	
	A	B	A	B	A	B	A	B	C	D
2½"	12"	7"	6"	7"	6"	6"	7"	8"	8"	14"
4"	14"	8"	7"	9"	6"	6"	8"	11"	8"	18"
6"	16"	10"	9"	10"	6"	8"	10"	12"	10"	21"
8"	22"	13"	12"	13"	8"	10"	13"	16"	12"	29"
12"	29"	21"	16"	21"	11"	16"	18"	24"	16"	41"
16"	38"	27"	21"	27"	12"	24"	24"	30"	20"	54"

NOTE: THRUST BLOCKS AT TRENCH FACE MUST HAVE A MINIMUM BEARING SURFACE OF 1.0 SQ. FOOT AND THE LEAST DIMENSION SHALL BE NO SMALLER THAN 1.5 TIMES PIPE DIAMETER, BUT NOT LESS THAN 1.0 FT.

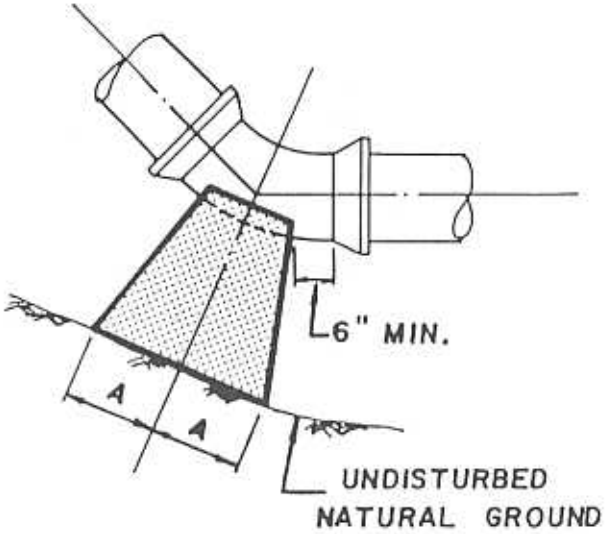

BEND

DATE: 9-19-88
SCALE: N.T.S.
DRAWING NO.: W-100
APPROVED BY: D.D.P.
DESIGN BY: K.R.K.

CITY OF SUGAR LAND
DEPARTMENT OF PUBLIC WORKS

THRUST BLOCK

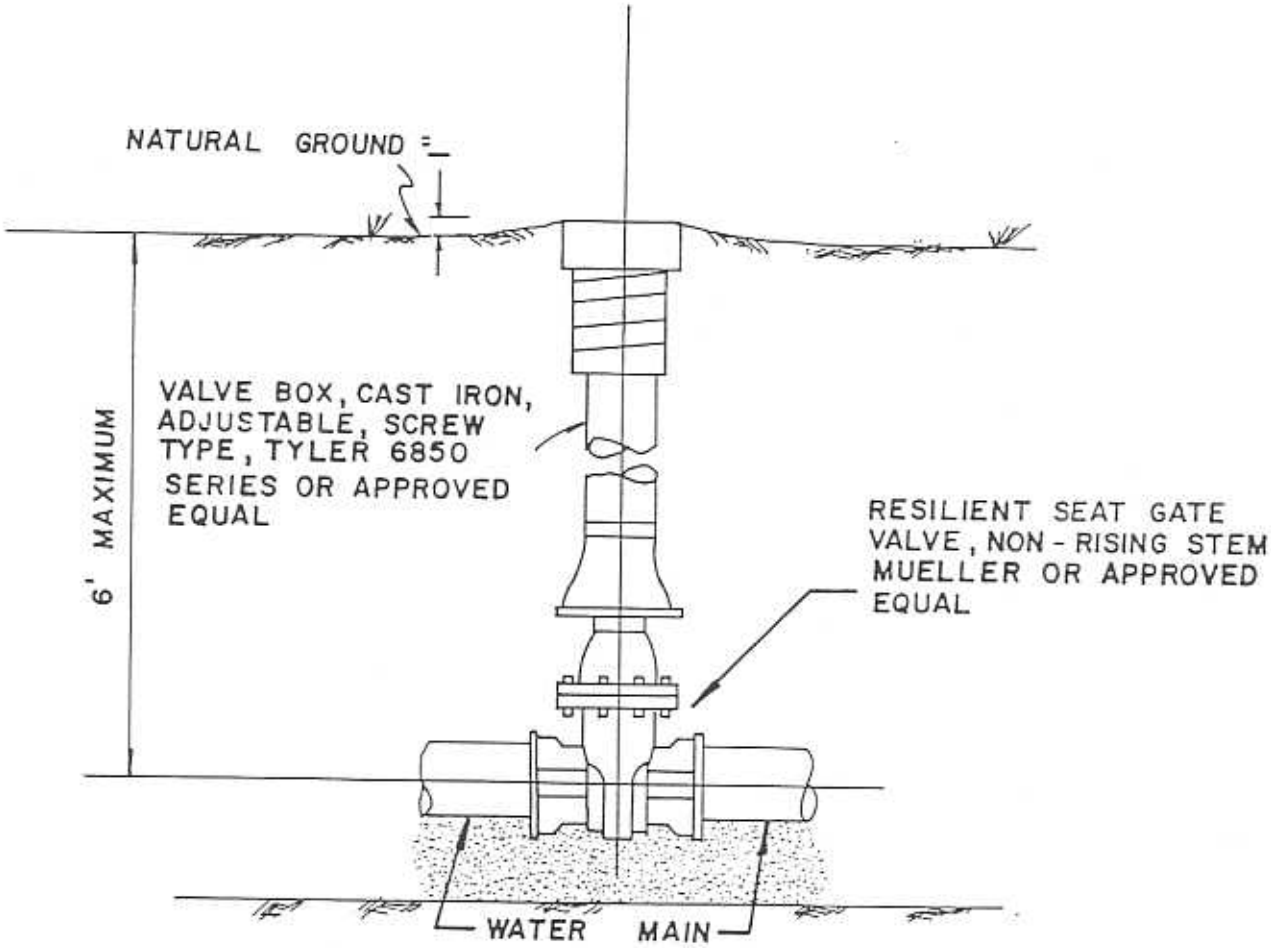

ELEVATION VIEW

DATE: 9-19-88	APPROVED BY: D.D.P.	DESIGN BY: K.R.K.
SCALE: N.T.S.	DRAWING NO.: W-101	

CITY OF SUGAR LAND
DEPARTMENT OF PUBLIC WORKS

GATE VALVE & BOX

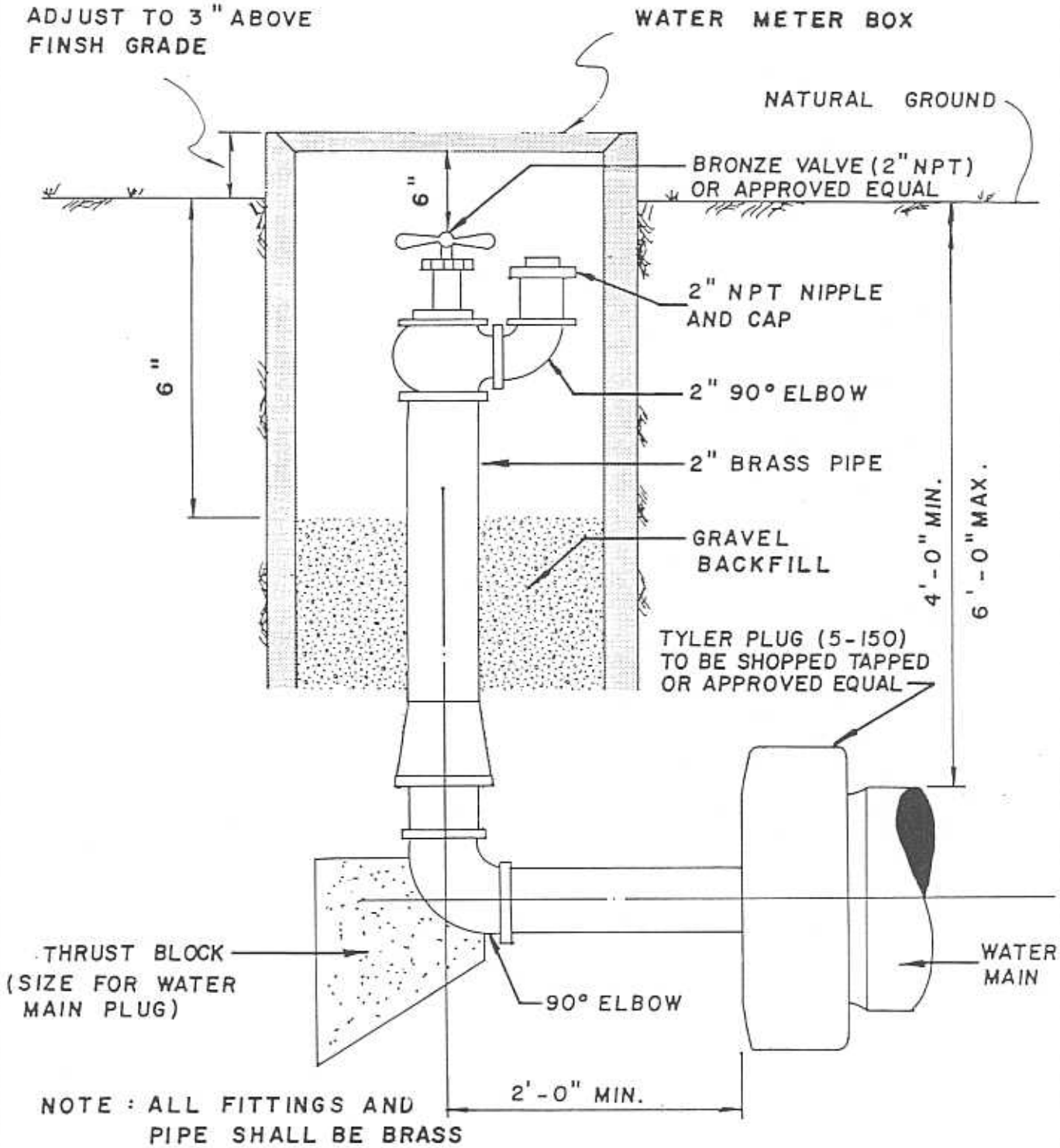

NOTE : ALL FITTINGS AND PIPE SHALL BE BRASS

DATE: 9-19-88	APPROVED BY: D.D.P.	DESIGN BY: K.R.K.
SCALE: N.T.S.	DRAWING NO.: W-102	

CITY OF SUGAR LAND
DEPARTMENT OF PUBLIC WORKS

BLOW-OFF ASSEMBLY

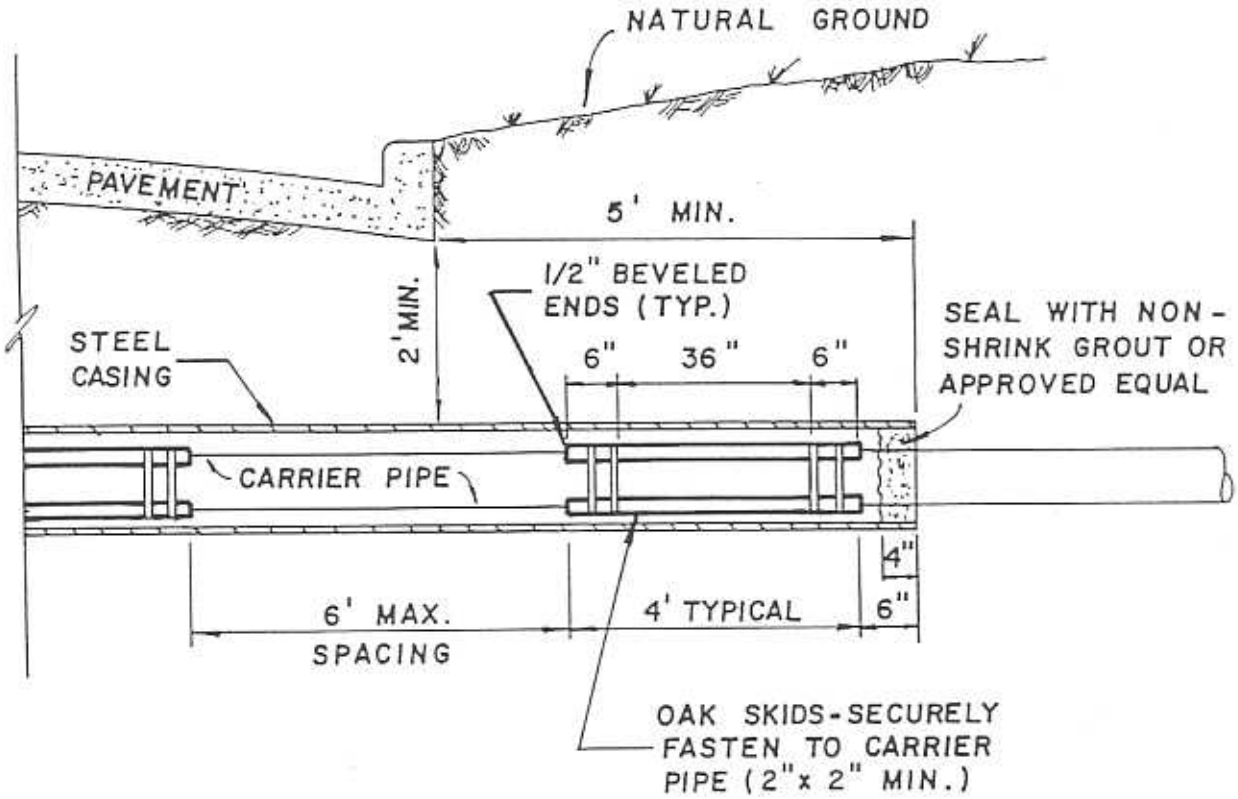

ELEVATION VIEW

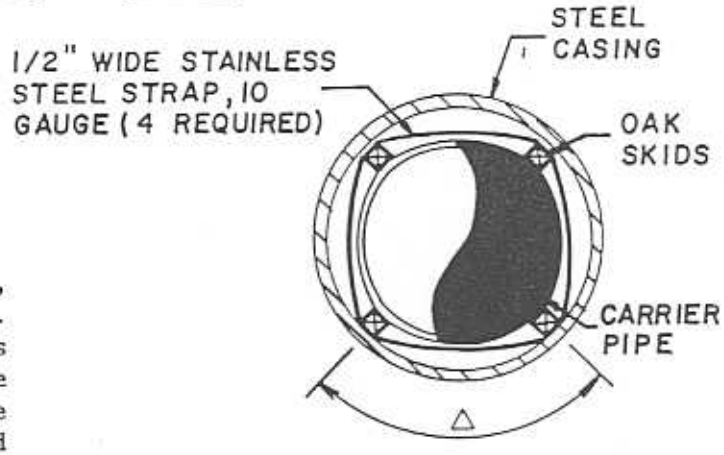

NOTES:

1. Spacing between timbers:
   Δ = 90° for 12" and under,
   Δ = 60° for pipe over 12".
2. Casing size and thickness shall conform to the minimum requirements of the Dept. of Public Works and other permits, as required.
3. Maintain 1/2 inch minimum clearance between the maximum outside diameter of carrier pipe and casing at all locations.
4. Dimensions are approximate only. Contractor shall install adequately sized casing to accommodate the carrier pipe.

SCHEDULE OF CASING		
CARRIER PIPE	NOMINAL CASING	MIN. WALL THICKNESS (IN.)
6"	12"	0.11
8"	14"	0.15
10"	16"	0.18
12"	18"	0.20

DATE: 9 - 19 - 88	APPROVED BY: D.D.P.	DESIGN BY: K.R.K.
SCALE: N.T.S.	DRAWING NO.: W - 103	

CITY OF SUGAR LAND
DEPARTMENT OF PUBLIC WORKS

WATER MAIN ENCASEMENT

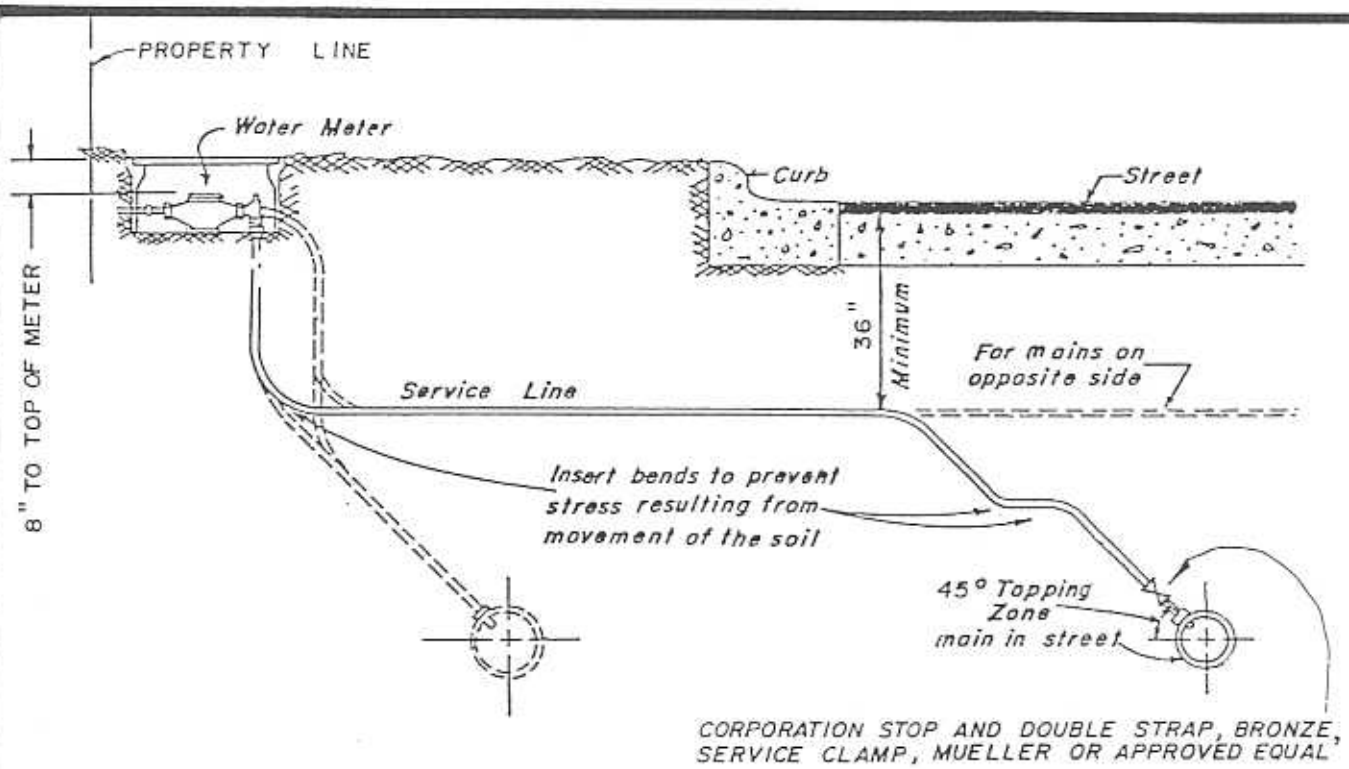

TYPICAL SECTION
SERVICE LINE

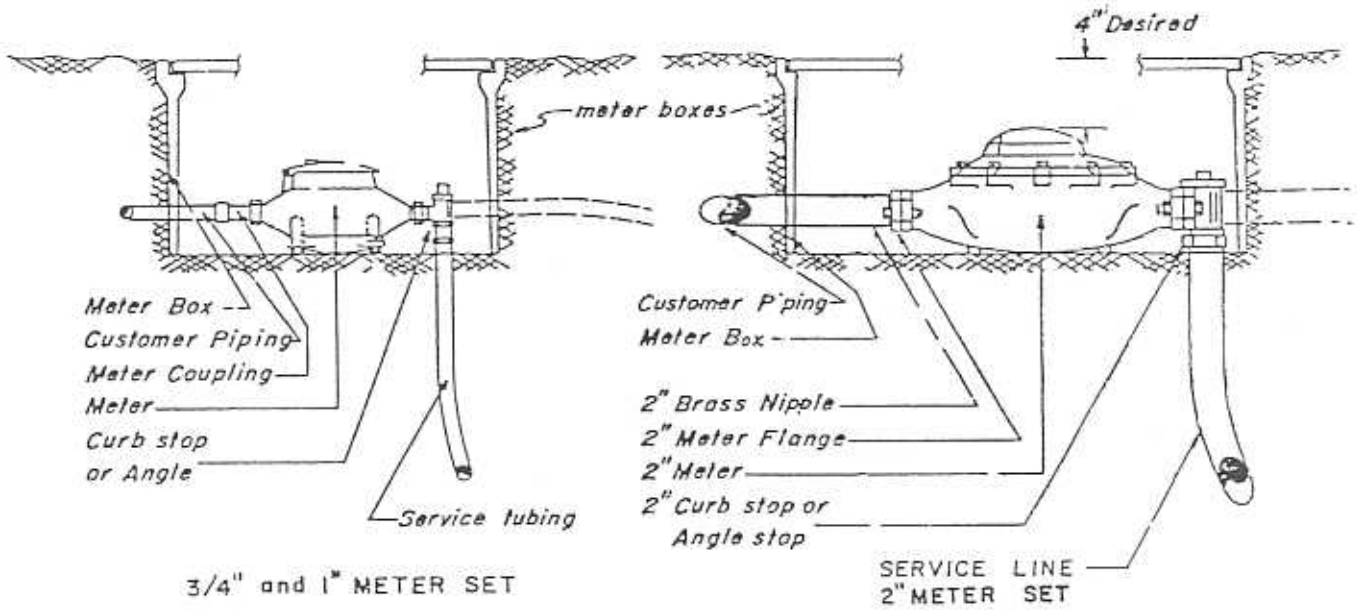

Note:

1. For minimum size water service line and fittings, see Section 3.11 Water Service .

DATE: 9 - 19 - 88	APPROVED BY: D.D.P.	DESIGN BY: K.R.K.
SCALE: N.T.S.	DRAWING NO.: W - 104	

CITY OF SUGAR LAND
DEPARTMENT OF PUBLIC WORKS

WATER METER RESIDENTIAL

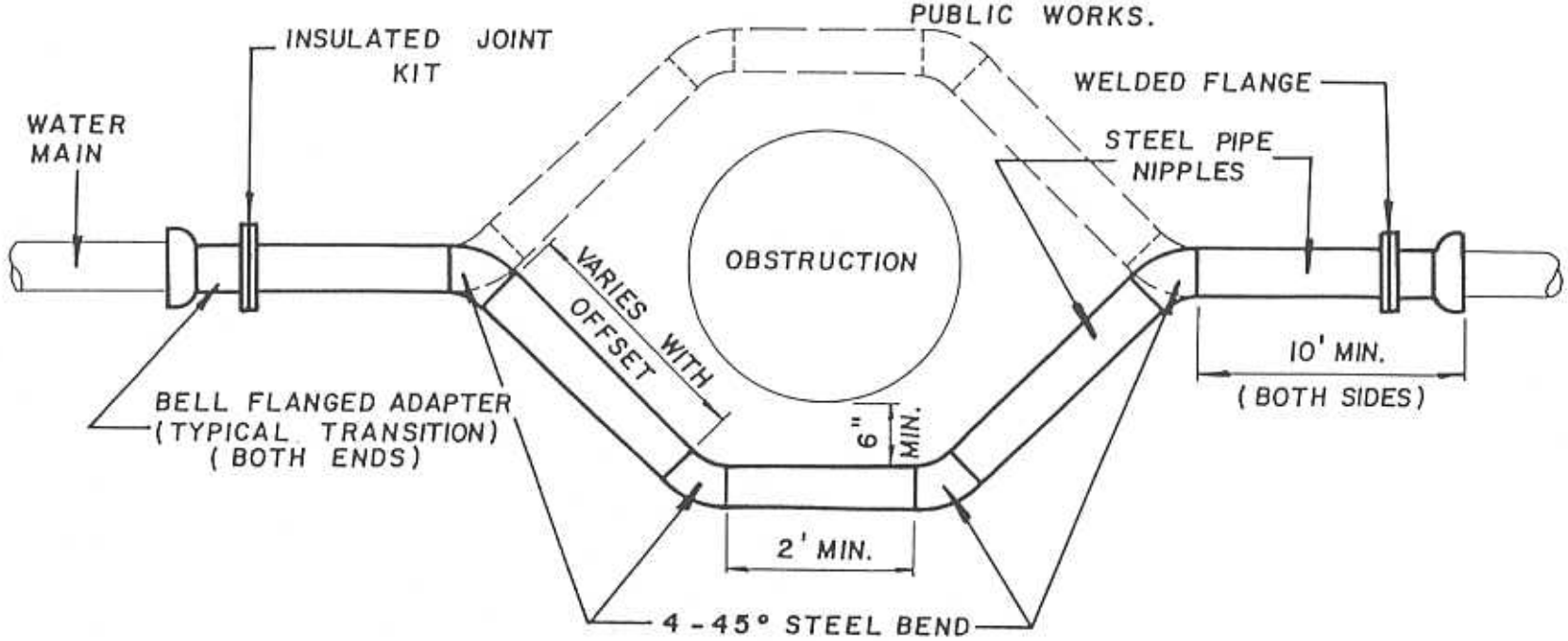

NOTES:

1. ALL MATERIALS AND COATINGS TO BE IN ACCORDANCE WITH DEPARTMENT OF PUBLIC WORKS SPECIFICATIONS.

2. INSULATED JOINT TO BE MADE UP USING INSULATING GASKETS, PLASTIC BOLT SLEEVES AND WASHERS OF INSULATING GASKET MATERIAL BACKED WITH ZINC-PLATED WASHERS, OR OTHER METHODS APPROVED BY THE DEPARTMENT OF PUBLIC WORKS.

MIN. WALL THICKNESS
PIPE AND FITTINGS

4"	-	0.250"
6"	-	0.280"
8"	-	0.322"
12" AND LARGER	-	0.375"

DATE: 9 - 19 - 88
APPROVED BY: D.D.P.
DESIGN BY: K.R.K.
SCALE: N.T.S.
DRAWING NO.: W - 105

CITY OF SUGAR LAND
DEPARTMENT OF PUBLIC WORKS

STEEL WATER PIPE OFFSET ASSEMBLY

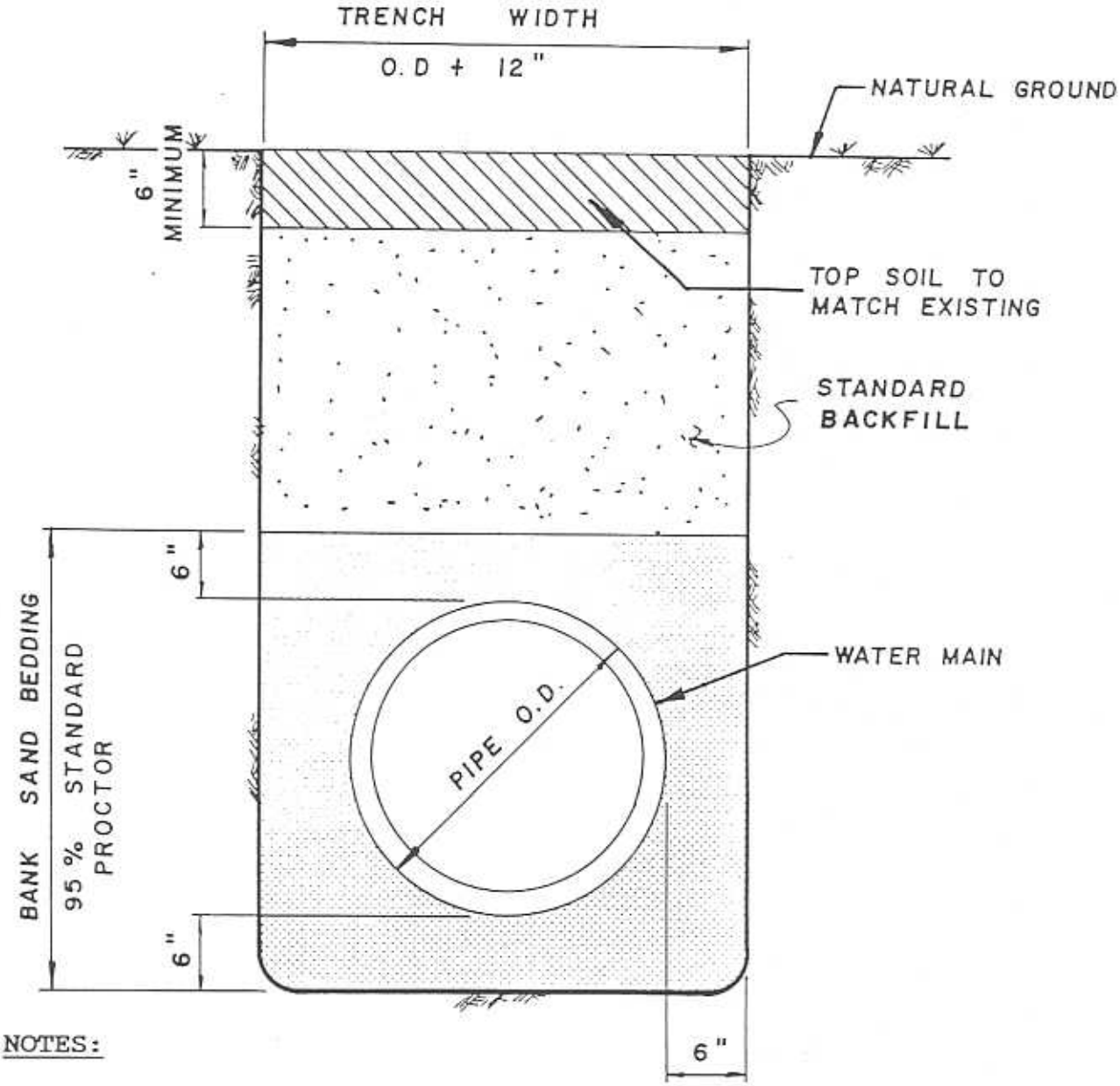

NOTES:

1. Backfill shall be native soil, free of debris, placed in lifts, 8" thick or less, compacted to 85% Standard Proctor Density, except as requirded below.

2. Backfill under driveway and public streets shall be cement stabilized sand (1.5 sacks of cement per cubic yard of sand), compacted to 95% Standard Proctor Density.

3. Trench shoring, in accordance with OSHA, shall be installed as required.

DATE: 9 - 19 - 88	APPROVED BY: D.D.P.	DESIGN BY: K.R.K.
SCALE: N.T.S.	DRAWING NO.: W - 106	

CITY OF SUGAR LAND
DEPARTMENT OF PUBLIC WORKS

WATER MAIN BEDDING & BACKFILL

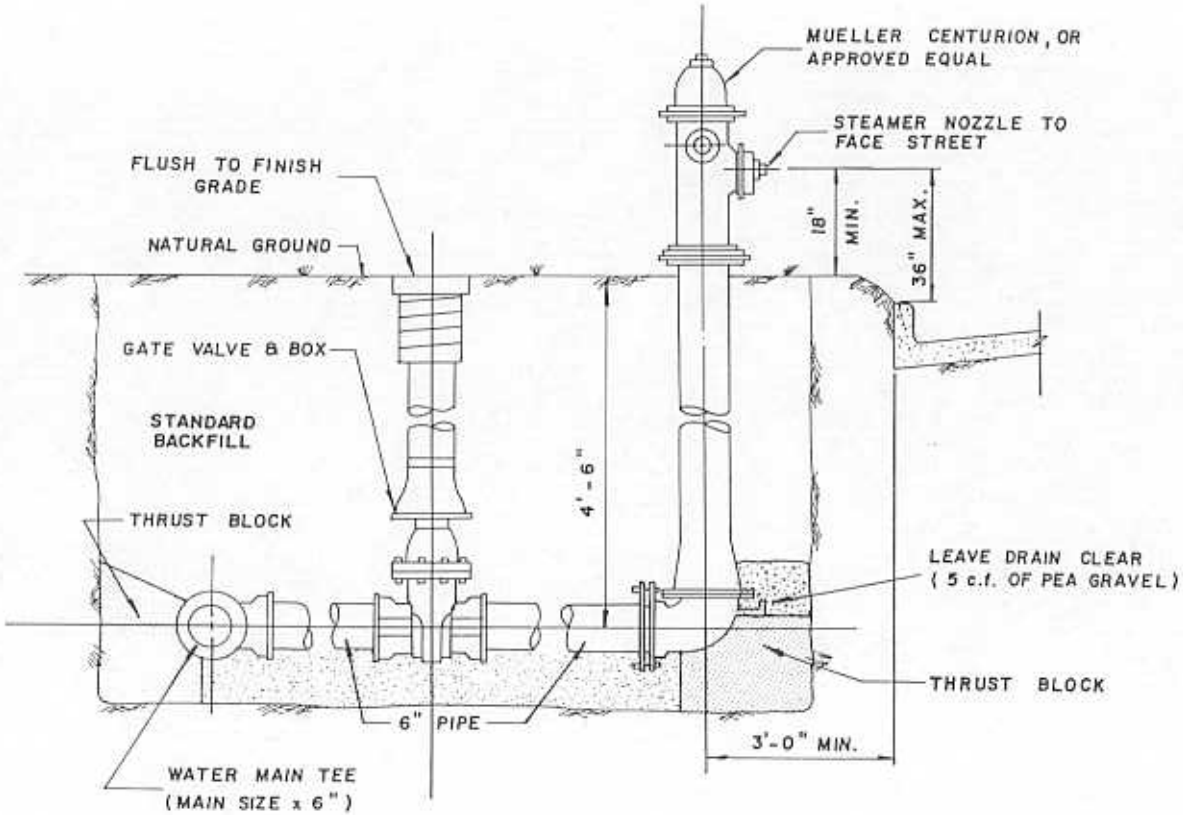

ELEVATION

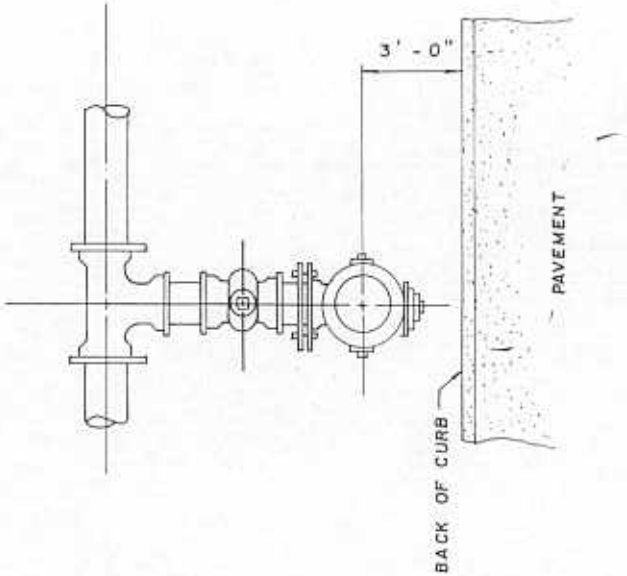

PLAN

DATE: 9-19-88	APPROVED BY: D.D.P.	DESIGN BY: K.R.K.
SCALE: N.T.S.	DRAWING NO.: W-107	
CITY OF SUGAR LAND DEPARTMENT OF PUBLIC WORKS		FIRE HYDRANT

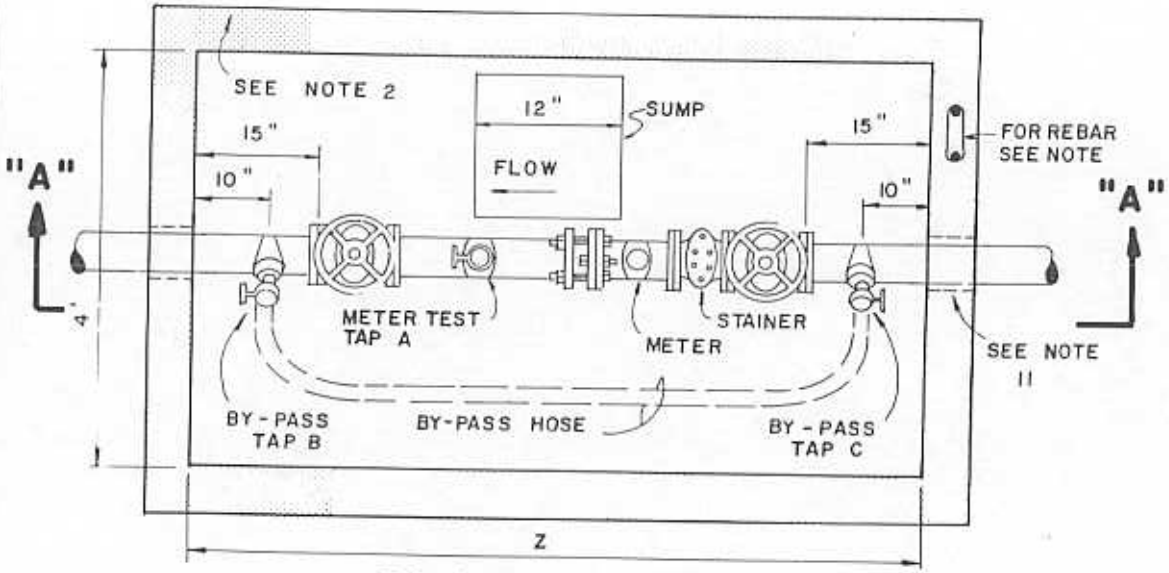

PLAN VIEW

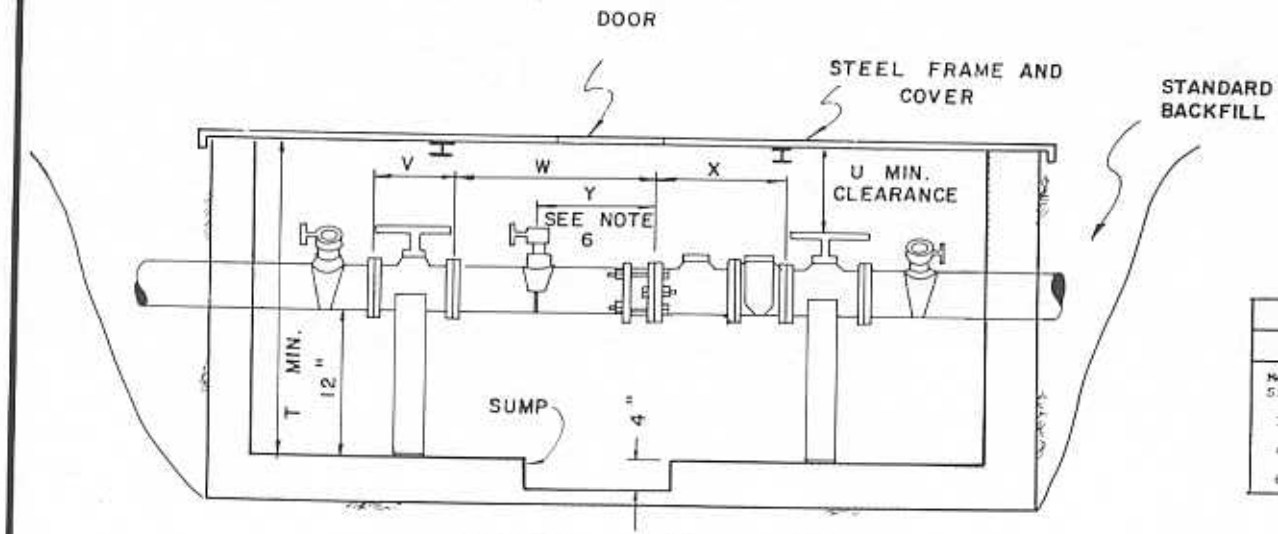

SECTION "A-A"

METER VAULT NOTES

1. Notify the Public Works Department (491-3522) prior to construction of vault or by-pass assembly.

2. The meter vault can be either poured in place or prefabricated. Concrete shall be six inches (6") thick and be 3,000 P.S.I. with #4 reinforcement steel on twelve inch (12") centers each way if the vault is poured in place. Prefabricated vaults shall be four inches (4") thick and be 4,500 P.S.I. concrete with #4 reinforcement steel on eight inch (8") centers each way. These are minimal specifications.

3. The vault will not be put in any drive or parking areas and must be located in a water meter easement.

4. The vault lid shall be a Bilco lid, Type Q-4 single leaf design. Angle frame is 1/4-inch steel with strap anchors bolted to the exterior. The leaf is 1/4-inch steel diamond pattern plate, pivoting on torsion bars for easy operation. The minimum live load capacity is 150 pounds per square foot. The size of the door is three feet (3') by three feet (3').

5. The lid shall be painted with 41-38 TNEMEC diffused aluminum paint or approved equal.

6. The by-pass and meter test tap shall be installed inside the vault. Tap "A" must be at least two (2) pipe diameters downstream of the meter. Taps "B" and "C" must be made at an approximate forty-five degree (45°) angle on each end of the pipe and centered ten inches (10") away from the wall. All taps shall be two inches (2") and shall include a Rockwell No. 317-045514-000 for three inch (3") by two inch (2"); Rockwell No. 317-056314-000 for four inch (4") by two inch (2"); Rockwell No. 317-076014-000 for six inch (6") by two inch (2"); and Rockwell No. 317-121214-000 service saddles with brass nipples and No. 7500 Ohio brass or approved equal.

7. The strainer, meter, and flexible coupling (Rockwell or approved equal) will be provided and installed by the City of Sugar Land Public Works Department or the District Operator.

8. The strainer, meter, and flexible coupling will not be set until the meter vault and taps are accepted by the City of Sugar Land Public Works Department. All utilities must also have been accepted and released by Public Works prior to meter installation.

9. The valves shall be any resilient wedge design gate valve which has received formal approval from the City of Sugar Land. All valves shall be flanged both ends and have hand wheels.

10. The bottom of the meter vault shall have a four-inch (4") fill sand cushion underneath. A sump four inches (4") deep and twelve inches (12") in diameter shall be installed to one side in the center of the bottom slab. If precast vault is used, Ram-Nek shall be used to seal all cold joints.

11. All wall penetrations shall be made with a cast in place wall sleeve as approved by the City of Sugar Land Department of Public Works. Breaking out the wall using a jackhammer or using knockout panels will not be allowed.

12. A concrete support will be installed under each valve.

13. Depth of vault shall be a minimum of four and one-half feet (4-1/2').

14. All piping inside the vault shall be ductile iron with flanged fittings. All piping shall conform to the requirements of the City of Sugar Land.

METER VAULT

DOMESTIC

Meter Size	T	U	V	W	X	Y	Z
3"	4'-6"	25"	8"	11-1/2"	24"	9"	6'-10"
4"	4'-6"	22"	9"	13-1/2"	29"	10"	7'-3"
6"	5'-2"	26"	10-1/2"	13-1/2"	31"	13"	8'-2"

IRRIGATION

Meter Size	T	U	V	W	X	Y	Z
3"	4'-6"	25"	8"	16-1/2"	19"	9"	6'-10"
4"	4'-6"	22"	9"	19-1/2"	21"	10"	7'-3"
6"	5'-2"	26"	10-1/2"	19-1/2"	27"	13"	8'-2"
8"	6'-0"	31"	11-1/2"	25-1/2"	30"	17"	9'-1"
10"	7'-0"	37"	13"	29-1/2"	41"	22"	10'-9"

DATE: 9 - 19 - 88	APPROVED BY: D.D.P.	DESIGN BY: K.R.K.
SCALE: N.T.S.	DRAWING NO.: W - 108	
CITY OF SUGAR LAND DEPARTMENT OF PUBLIC WORKS		3" - 10" TURBINE METER

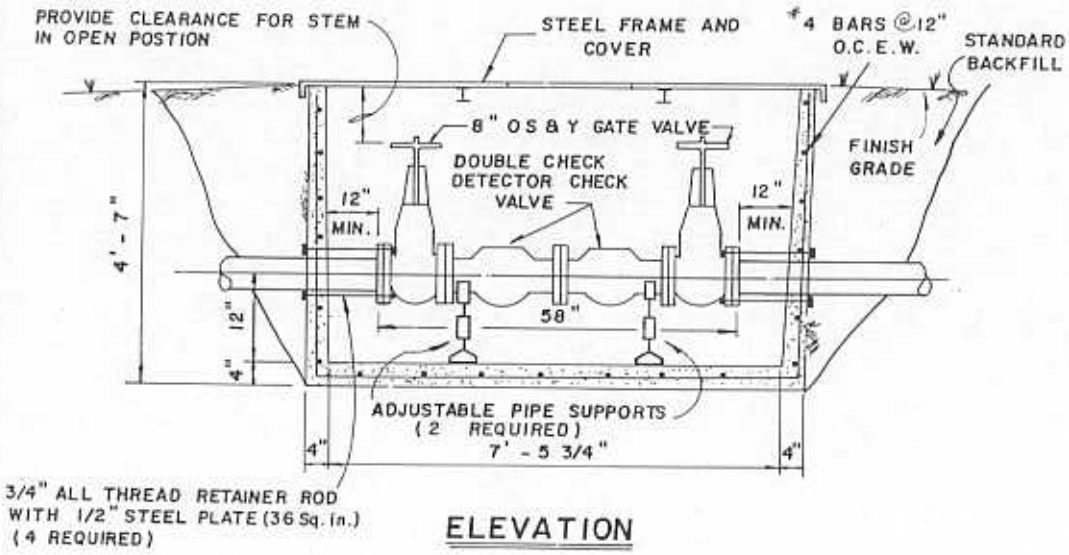

ELEVATION

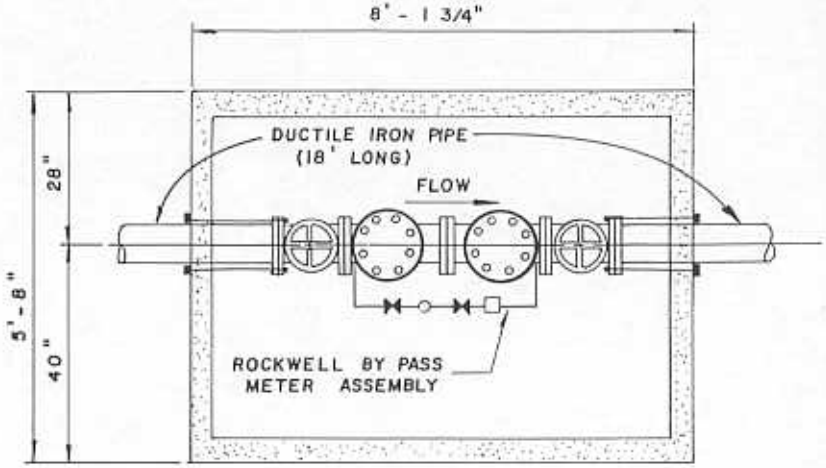

PLAN

NOTES:

1. Siamese connection may be allowed within the vault when approved by the Department of Public Works.
2. Fire valve may be substituted for gate valve on the customer side.
3. Vault and cover shall be precast with fabricated non-skid cover as supplied by Park Equipment Company, or approved equal.

DATE: 9 - 19 - 88	APPROVED BY: D.D.P.	DESIGN BY: K.R.K.
SCALE: N.T.S.	DRAWING NO.: W-109	
CITY OF SUGAR LAND DEPARTMENT OF PUBLIC WORKS	DETECTOR CHECK VALVE	